DRAWING MADE IN THIRD ANGLE PROJECTION

THIS DRAWING IS UNPUBLISHED. RELEASED FOR PUBLICATION ,19 .
© COPYRIGHT 19 BY AMP INCORPORATED. ALL INTERNATIONAL RIGHTS RESERVED.

MOD	LOC	DIST
2	BD	39

P	F	ZONE	LTR	DESCRIPTION	DATE	APPD
			B	REDRAWN	6/7/90	–
			C	REV PER ECN BD4814	05/31/91	–
			D	REV PER ECN BD5049	7-2-91	TMS
			E	REVISED PER ECN BD6133	04/02/92	TMS

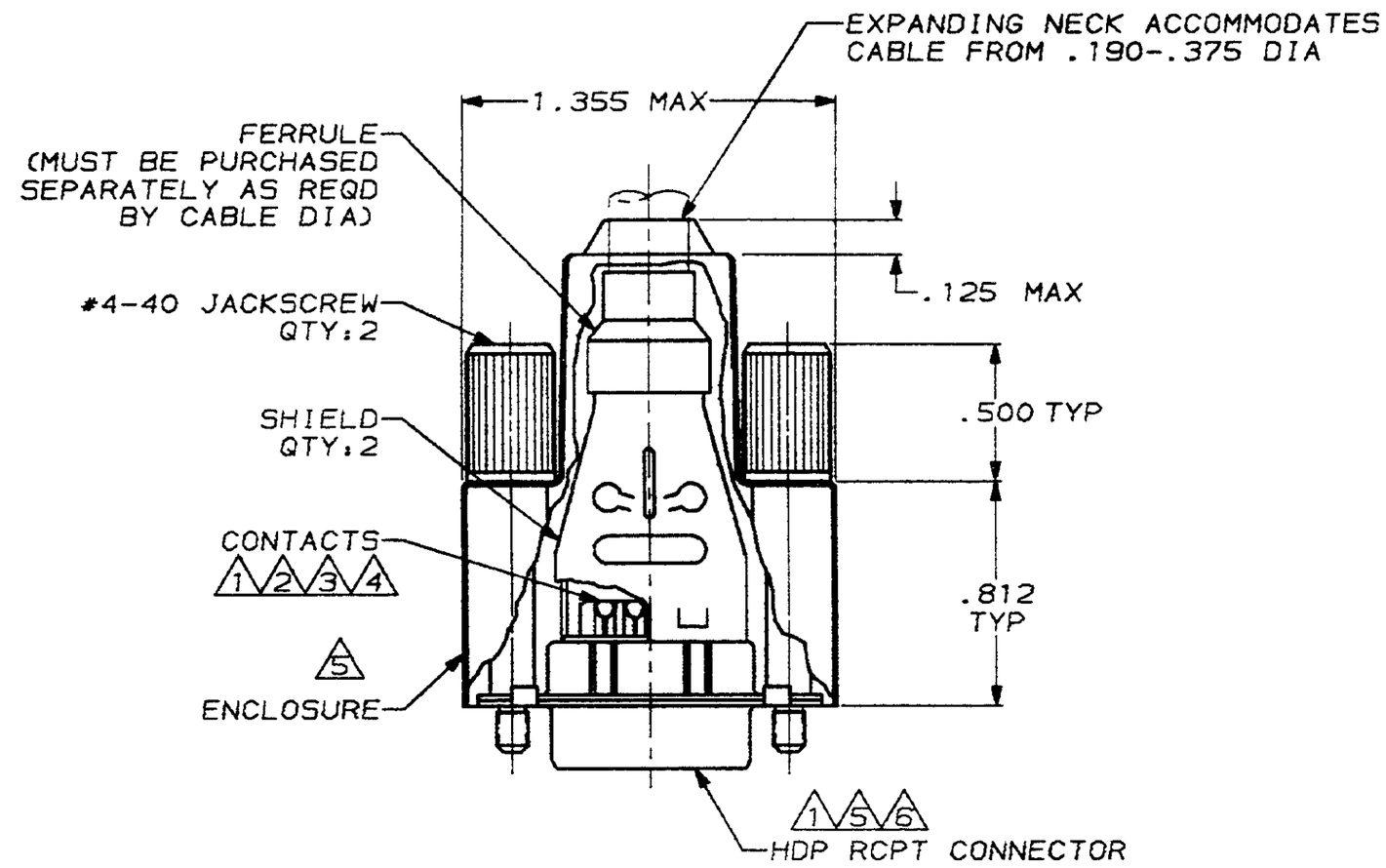

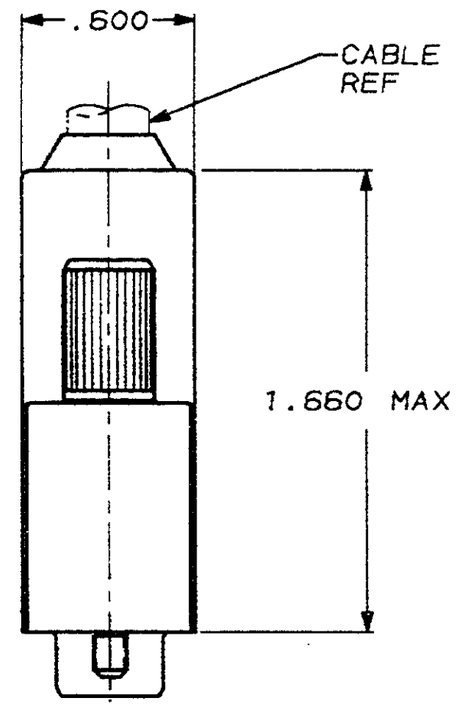

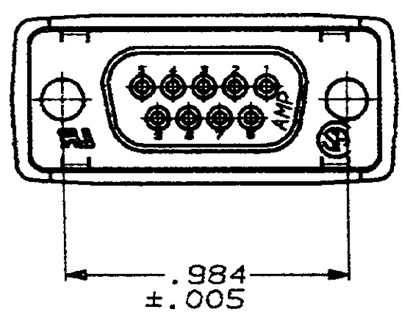

1. RCPT CONNECTOR FULLY LOADED WITH CONTACTS. ALL OTHER PARTS ARE SHIPPED UNASSEMBLED, EACH PART INDIVIDUALLY BULK PACKED.
2. PHOSPHOR BRONZE PER QQ-B-750.
3. SOLDER CUP WILL ACCOMMODATE 20 AWG MAX WIRE.
4. GOLD FLASH FOR LENGTH OF .150 MIN ON MATING END. .000150-.000300 TIN LEAD ON SOLDER END, ALL OVER .000030 NICKEL ON ENTIRE CONTACT.
5. FLAME RETARDANT 94V-0 RATED THERMOPLASTIC, BLACK.
6. STEEL PER ASTM A109.
7. TIN PLATING PER MIL-T-10727.
8. ZINC PLATING PER ASTM B633, TYPE II, CLASS SCI, BLACK CHROMATE.

4	748047-1
CONTACT FINISH	PART NUMBER

DO NOT SCALE PRINT.
UNLESS SPECIFIED
DIMENSIONS IN INCHES
TOLERANCES ON :
2 PLC DEC ± –
3 PLC DEC ± .020
ANGLES ± –

MATERIAL
CONTACTS: 2
SHELLS & SHIELDS: 6
JACKSCREWS: ZINC ALLOY
MOLDED PARTS 5

FINISH
CONTACTS: SEE TABLE
SHELLS & SHIELDS: 7
JACKSCREWS: 8

DR 6/7/90 A.STAUB BG
CHK 8-31-90 J.McCLINTON
APPD 9-4-90 BOB TAYLOR
APPD 9-4-90 J.ASSINI
PRODUCT SPEC –
APPLICATION SPEC –
WEIGHT –

AMP INCORPORATED Harrisburg, Pa. 17105

NAME
BULK KIT, RCPT, AMPLIMITE™, SHIELDING ENCLOSURE, 9 POSN, SIZE 1, HDP-20

SIZE	FSCM NO	DRAWING NO
C	00779	748047
SCALE 2:1		SHEET 1 OF 1

CUSTOMER DRAWING

AMP 1471-6 REV 3-89

02 APR 1992 15:22:35 amp25061 /home/sa026a/dept4023/amp25061/u.bd6133